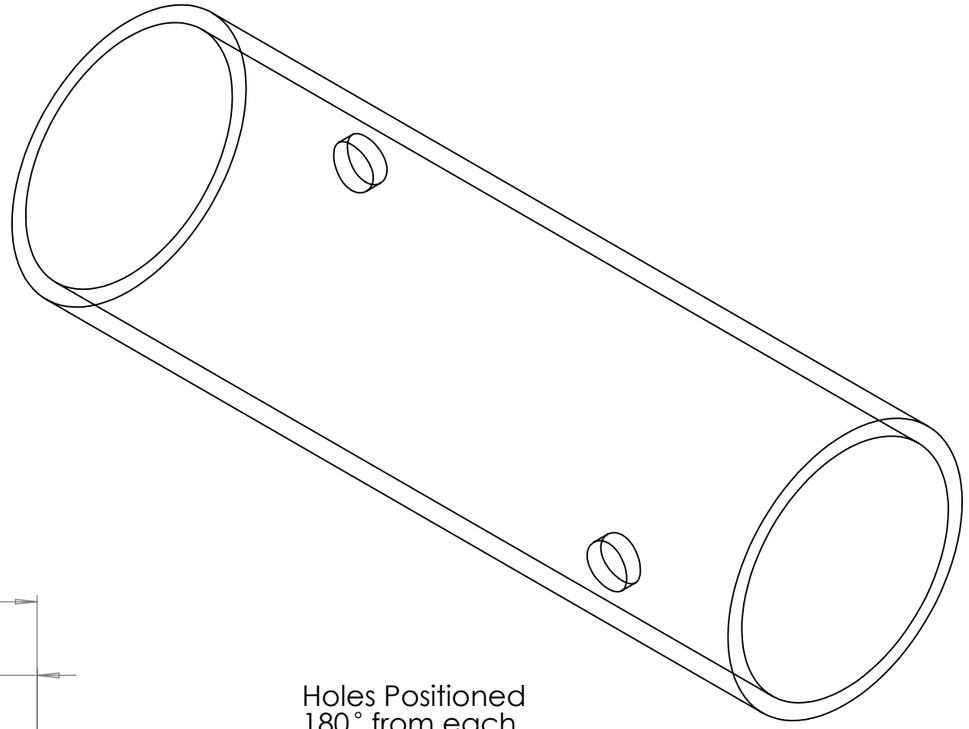

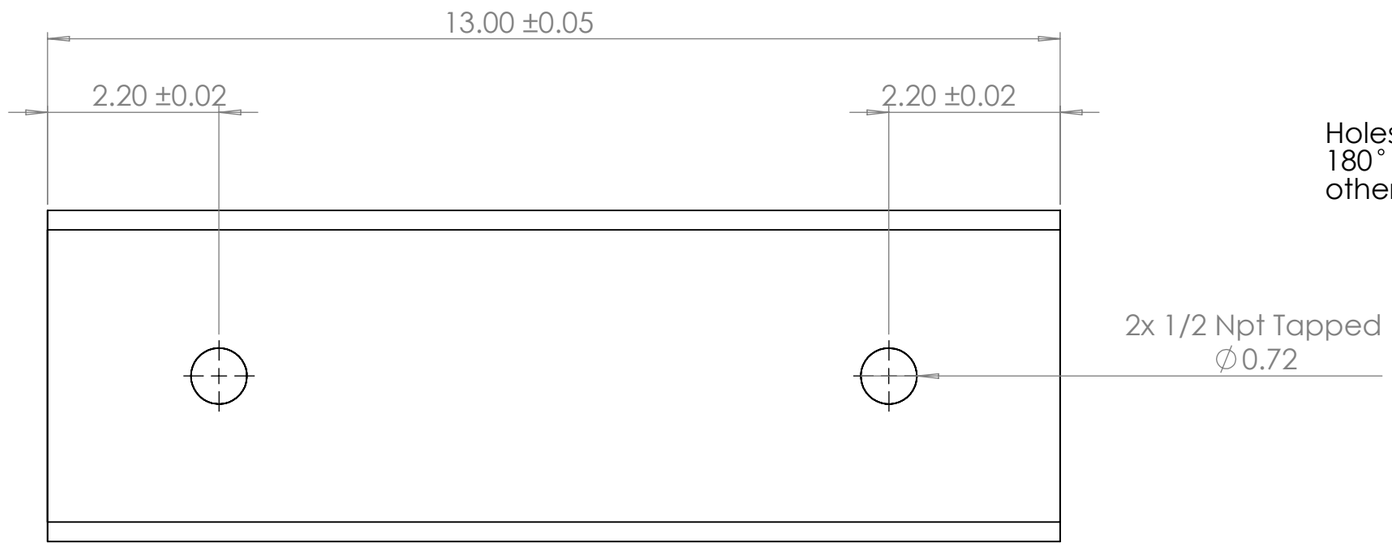

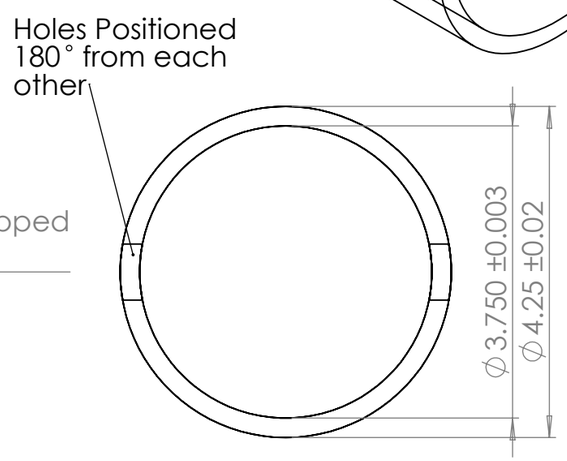

UNLESS OTHERWISE SPECIFIED: DIMENSIONS ARE IN MILLIMETERS SURFACE FINISH: TOLERANCES: LINEAR: ANGULAR:	FINISH:				DEBURR AND BREAK SHARP EDGES	DO NOT SCALE DRAWING	REVISION
	NAME	SIGNATURE	DATE				TITLE:
DRAWN	Dennis Decker						
CHK'D							
APPV'D							
MFG							
Q.A				MATERIAL: Acrylic		DWG NO. Shell	A3
				WEIGHT:		SCALE:1:2	SHEET 1 OF 1